2B145-100 A287Y

Air-Ride®

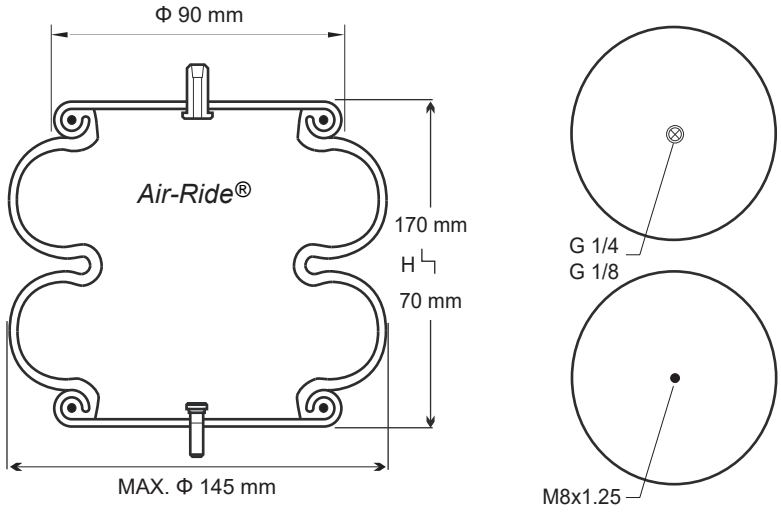

Cross-reference

ContiTech	-
Firestone No.	-
Firestone Style	-
Goodyear	-
Goodyear Flex No.	-

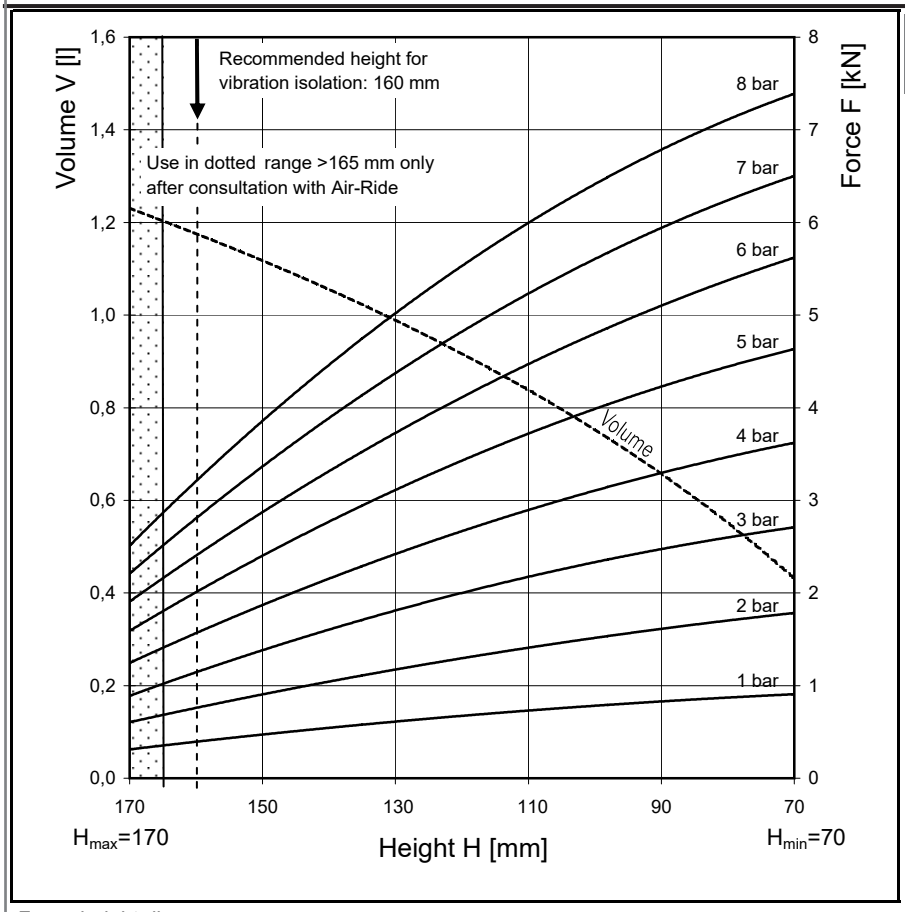

Force-height diagram

Technical data

Min. pressure	0 bar
Return force to min. height	≤ 200 N
Overall weight with clamped plates	1.3 kg

Vibration isolation - dynamic characteristic values
Design height H: recommended 160mm, minimum 150mm

Pressure p [bar]	3	4	5	6	7	8	Vol.[l]
Force (Load) [KN]	1.1	1.5	2.0	2.4	2.8	3.2	1.2
Spring rate [N/cm]	340	450	580	700	825	950	1.2
Natural frequency [Hz]	2.8	2.8	2.7	2.7	2.7	2.7	1.2

Pneumatic application - static characteristic values
Force F [kN]

Pressure p [bar]		3	4	5	6	7	8	Vol.[l]
Height H [mm]	160	1.1	1.6	2.0	2.4	2.8	3.2	1.2
	140	1.6	2.2	2.8	3.3	3.9	4.5	1.1
	120	2.0	2.7	3.4	4.1	4.8	5.5	0.9
	100	2.3	3.1	4.0	4.8	5.6	6.4	0.7
	80	2.6	3.5	4.5	5.4	6.3	7.1	0.6

© 2019 Air-Ride, ALL RIGHTS RESERVED. http://www.air-ride.cc/